Experiment-1

2-Terminal Device Characteristics and Diode Characterization

Introduction	The objectives of this experiment are to learn methods for characterizing 2-terminal devices, such as diodes, observe some fundamental trends in the characteristics of various diode types, and to gain some familiarity with standard test bench instrumentation.
Precautions	None of the devices used in this set of procedures are particularly static sensitive; nevertheless, you should pay close attention to the circuit connections and to the polarity of the power supplies, diodes, and oscilloscope inputs.
Part Numbers	You may find that your lab kit may be missing the specific part number that is called out in the procedures. If this is the case, consult the parts list in the first section of this laboratory handbook for a possible substitution. If you are still confused as to which part to use, then consult the T.A.

Procedure 1 Measurement of diode reverse leakage current

Set-Up

Configure a DC power supply to produce an output voltage of VSS = +10.0 Volts. Verify this voltage with the bench DMM. If the DC power supply has a current limiting ability, configure the power supply to limit the current to 100 mA. Route the output of the DC power supply to your breadboard using two squeeze hook test leads.

For this next procedure you will measure the leakage current of four different diodes. Each diode should be connected as shown in Fig. E1.1. Use the following parts:

R1 = 1.0 MΩ 1% 1/4 W
D1 = 1N34A, 1N4004, 1N4148, or 1N5819

Use the solderless breadboard to connect the components, noting that each set of 5 vertically oriented holes constitutes a tie point. The horizontal rows of holes are all internally connected into a single tie point; these are normally used for power supply distribution. To attach test leads to the breadboard, you can use either the exposed end of a component lead, or you can insert a small pin into the appropriate tie point and connect the squeeze hook or oscilloscope probe to the pin.

Connect up only one diode at a time in the circuit of Fig. E1.1, noting that the banded end of each diode is the cathode, which corresponds to the bar on the circuit symbol. Connect the DC power supply across both R1 and D1 and then connect the DMM across only R1 using two pairs of squeeze hook test leads as shown above. The DMM should read less than +10.0 V.

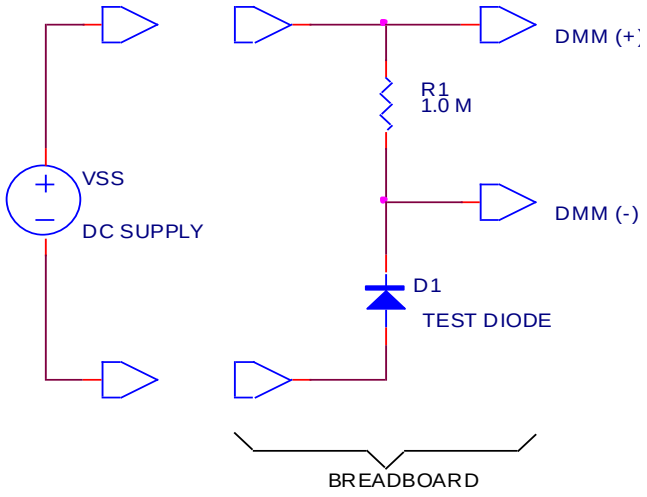

Figure E1.1

Measurement-1

Measure the reverse leakage current for the 1N34A, 1N4004, 1N4148, and 1N5819 diodes. Do this by using the DMM to measure the voltage across R1

and divide this voltage by R1 = 1.0 MΩ to obtain the current through R1, and therefore the current through D1. Record your measurements and calculations in a table in your notebook.

Question-1 Order these four diodes in rank, from smallest to largest reverse leakage current. Which diode would be the most suitable for charging up a capacitor and allowing the capacitor to keep its charge for the longest period of time?

Procedure 2 Measurement of diode forward turn-on voltage

Set-Up

In this procedure you will test each of the four diodes used in Procedure 1 at six different current levels. First note that the polarity of the diode is now reversed from that of the previous procedure. The current levels will be set by R1 which will be set to one of six possible values. To speed up this process, you may wish to insert all six resistors and all four diodes into the breadboard at once so that one end of each resistor connects to the anode of each diode. The long, horizontal tie point strips on the solderless breadboard are quite convenient for this. The proper resistor and diode can then be quickly selected by simply moving the power supply leads. Use the bench DMM to measure the DC voltage across either the resistor or diode, as shown in Fig. E1.2. Connect the circuit for each diode and resistor pair as shown in Fig. E1.2 using the following parts:

R1 = 100 Ω, 1.0 kΩ, 10 kΩ, 100 kΩ, 1.0 MΩ, or 10 MΩ, 1% 1/4W
D1 = 1N34A, 1N4004, 1N4148, or 1N5819

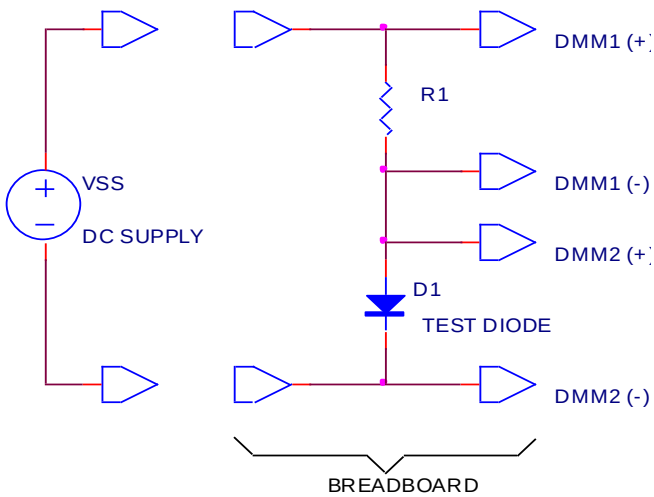

Figure E1.2

Measurement-2

For each of the four diodes (1N34A, 1N4004, 1N4148, and 1N5819), follow this procedure. Adjust the DC power supply VSS to produce +10.0 Volts across R1 by monitoring with the DMM1. Measure the forward turn-on voltage of the diode with DMM2. If two DMMs are not available at your lab bench, you may have to switch back and forth between the two terminals at DMM1 and DMM2. Record the diode's current and voltage in a table in your notebook. The diode current is equal to 10.0 V/R1. Change the resistor to the next value and repeat. After measuring six different different (I,V) pairs for the diode, change the diode to the next one and repeat each of the six measurements again. Trade off between lab group members, so that everyone gets to do at least one diode.

Question-2

(a) Using some graph paper, plot the common (base 10) logarithm of the current versus the voltage for each diode; that is, create a semi-log plot of I versus V, where I is on a log scale and V is on a linear scale.

(b) For each decade of increase in diode current, how much does the diode turn-on voltage increase by?

(c) Identify current ranges on your graph that correspond to diode ideality factors of 1 and 2. Identify any other obvious trends.

(d) Rank the four diodes from smallest to largest turn-on voltage. How does this ranking compare to that for reverse leakage current?

(e) Which of the four diodes would be the most suitable for building a high-efficiency bridge rectifier?

Procedure 3 Measurement of diode I-V characteristics using the oscilloscope

Comment

In this procedure, you will use an oscilloscope and the laboratory transformer to display the current-voltage (I-V) characteristics of a diode. This procedure relies entirely upon the ability to float the transformer output at a potential which is different from the ground of the oscilloscope. (All oscilloscopes have each channel grounded to the 120 VAC safety or chassis ground, so an oscilloscope can only be made to float by the use of an additional isolation transformer.) This procedure can also be performed using a signal generator which produces a floating output; however, the following procedures assume that you are using the laboratory transformer.

Set-Up

Connect the circuit shown in Fig. E1.3 using the following components:

R1 = 1.0 kΩ 1% 1/4 W

D1 = 1N34A, 1N4004, 1N4148, or 1N5819

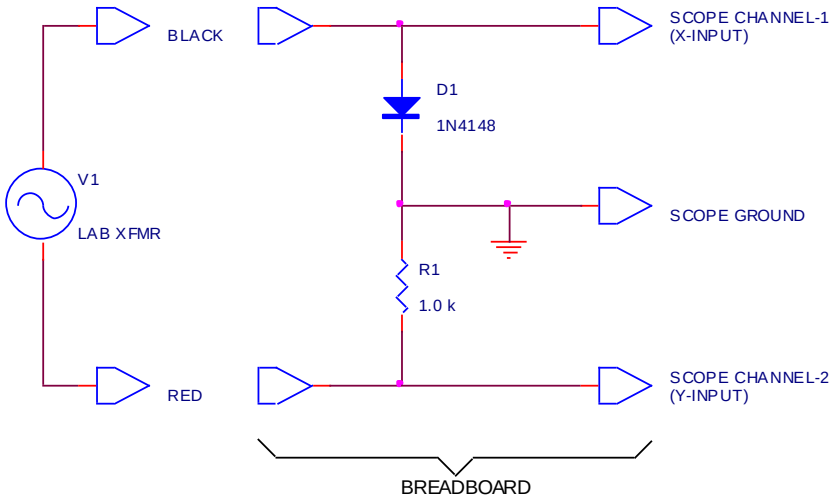

Figure E1.3

Plug the laboratory transformer into a 120 VAC receptacle, and turn its power switch OFF. Connect one lead from the black banana jack (+6.3 VAC) output of the lab transformer to the diode on the breadboard, and then connect another lead from the red banana jack (-6.3 VAC) output of the lab transformer to the resistor R1 on the breadboard as shown in Fig. E1.3. This will establish a 20 V peak, 60 Hz sinusoidal input to the circuit.

Comment

The two outputs from the laboratory transformer are nominally rated at ± 6.3 VAC, rms. This value applies to conditions where the transformer is delivering its rated current of 2.0 Amps to some load. When the tranformer is operating under open-circuit conditions (or with a negligibly small load), the output voltage is closer to ± 7.5 VAC, rms. This indicates that each side of the transformer secondary has a series resistance of 0.60 Ω. Thus, each side of the transformer secondary winding will produce a 60 Hz sine wave with a

voltage of ±10.6 V, peak. Taking the output from both sides in series, i.e. from between the black and red terminals, will produce 21.2 V, peak. Thus, when a 10 V peak input is required, take this from either the black and white terminals on the lab transformer, or from the red and white terminals. If a 20 V peak input is required, take this from the black and red terminals on the lab transformer. If you are not able to obtain an output, check the circuit breakers in the lab transformer.

More Set-Up

Next, configure an oscilloscope to display the I-V characteristics as follows: Attach a 10× oscilloscope probe to Ch-1, connect the probe to the diode (the same connection point as the black output of the lab transformer), and connect its ground lead to the junction between the diode and the resistor. Attach a second 10× oscilloscope probe to Ch-2, connect the probe to the resistor (the same connection point as the red output of the lab transformer), and connect its ground lead to the junction between the diode and the resistor. Configure the oscilloscope to produce an X-Y display, using Ch-1 as the X-axis and Ch-2 as the Y-axis. Set Ch-2 to invert the incoming signal. Set the Ch-1 range to 0.1 V/div which establishes the x-axis scale of the display as 1.0 V/div, since a 10× probe is being used. Set the Ch-2 range to 0.5 V/div which establishes the y-axis of the display to 5 mA/div, as a result of the value of R1 = 1.0 kΩ and the 10× probe.

Turn ON the power switch on the lab transformer to energize the circuit. At this point you should have something on the screen which resembles the I-V characteristics of a diode. Adjust the position controls to center and calibrate the curve to the center point of the screen as follows: Switch both Ch-1 and Ch-2 input couplings to GND. Adjust the vertical position control for Ch-2 and the horizontal position control to move the dot to the exact center of the oscilloscope screen. After having done so, return both the Ch-1 and Ch-2 input couplings to DC. You may need to decrease the intensity of the trace to remove any halo from around the dot.

Comment

The oscilloscope should now be displaying a graph of the current-voltage (I-V) characteristics of the device. The vertical axis or y-input is proportional to the current through the diode, since it measures the voltage across R1. The voltage across R1 is proportional to the current flowing through it, and this same current flows through the diode. The horizontal axis or x-input is proportional to the voltage across the diode. Thus, this circuit produces a simple, but effective and accurate curve tracer. Note that the Ch-2 input to the oscilloscope must be inverted in order to account for the polarity of the voltage drop produced across R1. This then keeps the I-V characteristics of a passive device within quadrants 1 and 3 of the I and V axes, as they are normally drawn.

Almost all commercial curve tracers, such as the very common Tek-576, perform their voltage sweep at a 60 Hz rate. This is usually derived directly from the AC line frequency. This feature has the advantage of making the sweep synchronous with the AC power line and therefore somewhat more robust to AC power line interference. At a different sweep frequency, the I-V characteristics would otherwise flutter around as a result of beating with fluorescent light and other stray pick-up coupling which might be oscillating at 60 Hz.

Measurement-3 Sketch the I-V characteristics of each diode in your notebook (they should look like the oscilloscope trace) on the same set of axes. Using the scaling factors from the oscilloscope, scale the x and y axes of your sketch with tick marks for current and voltage. Graph paper is handy for this and makes the following analysis easier.

Question-3 From your sketch, extract the forward-bias turn-on voltage (V_{on}) for each diode. Compare your answers to the results of the previous DMM readings.

Comment You may wish to keep the lab transformer and the oscilloscope in their present set-up configuration, since they will be used again to measure additional I-V characteristics in Procedure 4.

Procedure 4 Effect of series and parallel resistances

Comment

This procedure is a continuation of that from Procedure 3. The set-up from Procedure 3 can be kept as-is, aside from changing the diode back to the 1N4148 type.

Set-Up

Use the following parts to construct the circuit of Fig. E1.4 below:

R1 = 1.0 kΩ 1% 1/4 W
D1 = 1N4148

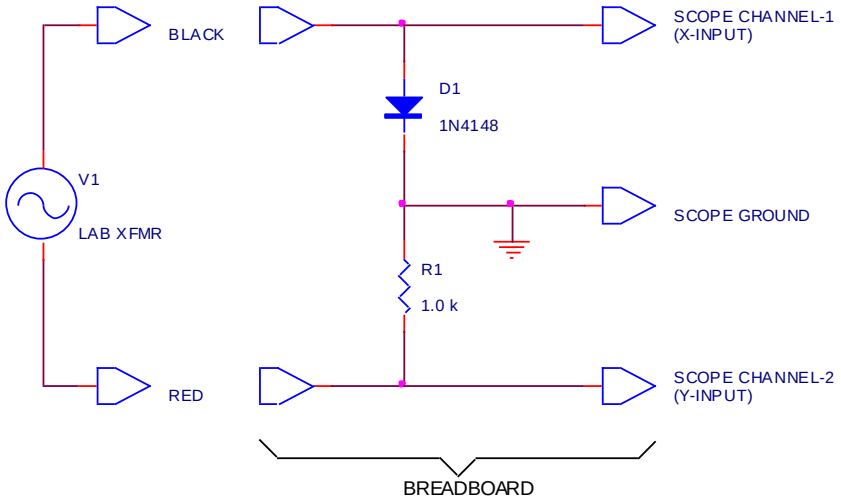

Figure E1.4

Connect the black (+6.3 VAC) output from the lab transformer and the 10× probe from Ch-1 (x-input) of the oscilloscope to the anode of the diode. Connect the red (-6.3 VAC) output from the lab transformer and the 10× probe from Ch-2 (y-input) of the oscilloscope to R1, as shown in Fig. E1.4. The ground leads from both oscilloscope probes should be connected to the junction between D1 and R1. Configure the oscilloscope to display an X-Y plot of Ch-1 versus Ch-2, with the Ch-2 input amplifier set to invert the signal. Set both oscilloscope input couplings to GND, center the dot in the exact middle of the oscilloscope screen, and return the input couplings on both channels to DC. Set the range selector for Ch-1 to 0.1 V/div and the range selector for Ch-2 to 0.5 V/div. With a value of R1 = 1 kΩ and 10× probes, this sets the horizontal scale to 1.0 V/div and the vertical scale to 5 mA/div. (This is the same set-up as described in Procedure 3.)

Measurement-4

Sketch the I-V characteristics of the 1N4148 diode in your notebook and label the current and voltage axes with tick marks matching to the scale factors on the oscilloscope.

Now, add another 1.0 kΩ 1/4W resistor in parallel with D1 and observe the effect on the I-V characteristics, as displayed on the oscilloscope screen.

Sketch these new characteristics in your notebook on the same set of axes as the first I-V curve. This new I-V curve represents how the diode is affected by a parallel leakage path.

Next, replace the D1 and 1.0 kΩ parallel combination with D1 and a 100 Ω resistor in series and observe the effect on the I-V characteristics. Sketch these new characteristics in your notebook on the same set of axes as the other two I-V curves. This new I-V curve represents how the diode is affected by additional series resistance which might arise from a poor contact or a faulty connection in a circuit.

Question-4 Using only a few well-chosen sentences, discuss the effects of series and parallel resistance on the observed I-V characteristics of a diode. Refer to your sketch of the characteristics as needed.

Procedure 5 Measurement of diode I-V characteristics using LabVIEW

Comment

Computer-controlled automatic measurements are commonly used to gather data for the purpose of characterizing or testing a device or system. In this experiment, a LabVIEW curve tracer will be used to capture the characteristic I-V curve for a pn-junction diode. This procedure will also use the NI-USB-6009 DAQ to both create the excitation voltages and to measure the resulting test voltage responses. No other external bench instruments are needed other than the computer, a USB cable, the NI-USB-6009 DAQ, a superstrip solderless breadboard, and a few solid jumper wires to connect the DAQ to the superstrip.

The NI-USB-6009 DAQ does have one awkward shortcoming which is that the analog output can only produce voltages in the range of 0.0 to +5.0 Volts. This limits the DAQ curve tracer to only being capable of tracing the forward characteristics. The reverse characteristics can be obtained by reversing the diode polarity in the test circuit.

Set-Up

First, launch LabVIEW. Click on Open Existing File and navigate to the EE-331 LabVIEW VIs directory. Open the VI named "DiodeCurveTracer.vi." For this VI to open correctly, three sub-VIs named "DiodeStepGenerator.vi," "DiodeMeasurement.vi" and "RemoveArrayDuplicates.vi" must also exist in the same directory as "DiodeCurveTracer.vi."

The front panel window is shown in Fig. E1.5 below.

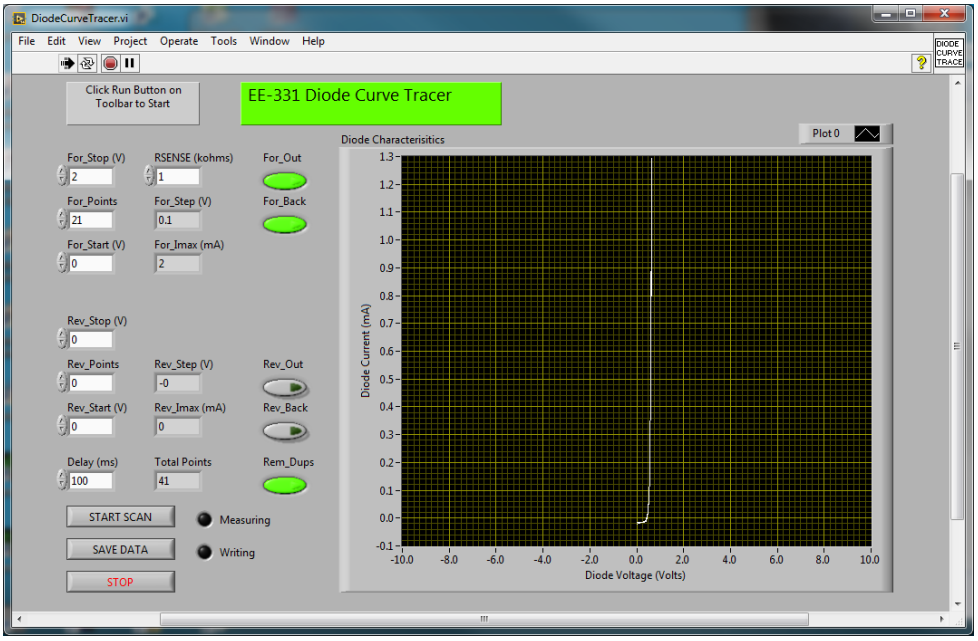

Figure E1.5

This diode curve tracer has been designed to allow different excitation voltage scans in the forward and reverse directions. The forward and reverse parts of the scan are set up independently according to their initial value (Start), their final value (Stop), and the number of points used for each (Points). Positive start and stop values are used for the forward scan, while negative start and stop values are used for the reverse scan. After these values are entered, the VI computes the voltage increment which is added to go from one point to the next (Step). The delay between when a new excitation voltage is output and when the device response is measured is entered in milliseconds in the Delay input box. Usually a delay of 50-100 ms gives the device plenty of time to stabilize between measurement points.

When the START SCAN button is clicked, this sequence of excitation voltages is passed to the analog output on the DAQ (AO-0) which first steps out (upward) in the forward direction, then back down to zero, then steps out (downward) in the reverse direction, and then back up to zero, making one complete cycle through the applied bias range for which the diode is to be tested. Each of these four segments can be independently included or excluded from the scan using the four green pushbutton switches on the front panel (For_Out, For_Back, Rev_Out, Rev_Back). When the pushbutton is illuminated in green, that part of the cycle will be included in the scan. When these different segments of the scan are concatenated, some duplicate voltage points will be generated. Clicking on the Rem_Dups button will remove these duplicate points from the scan when it is enabled in its illuminated green state. The total number of excitation voltage points in the scan is displayed in the box at the bottom of the front panel.

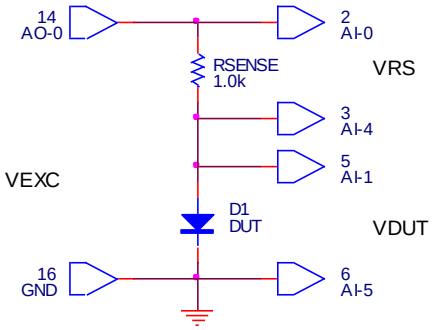

Figure E1.5a

The excitation voltage is applied across a series combination of the device under test (DUT) and a current sensing resistor (RSENSE), as shown in Fig. E1.5a. Thus, VEXC = VRS + VDUT, as shown in the schematic. The value of RSENSE is entered into the box at the top of the front panel in units of kΩ. This value is used to calibrate the vertical axis of the diode characteristics graph, and it is also used to compute the maximum current in milliamperes that can flow through the device under test, based upon the forward and reverse stop values (For_Imax, Rev_Imax).

The cathode end of the diode under test (the end with the bar) is grounded, so that when the excitation voltage is positive, a positive current flows downward through the current sense resistor and the diode in the conventional direction. The voltage across the diode (VDUT) is used to create the x-values for the I-V curves, and the y-values of diode current (IDUT) are obtained by dividing the voltage across the sense resistor (VRS) by the value of the resistor. This is typically how one accomplishes current sampling with a data acquisition system. The diode voltage and current are then plotted as (x,y) pairs in the chart. After the scan is complete, the SAVE DATA button can be clicked to write the data to a spreadsheet file. A window will pop open allowing the user to specify the filename for the data to be written into. The output spreadsheet file will consist of four columns of data with one row for each excitation voltage. The columns are: VEXC, VRS, VDUT, and IDUT = VRS/RSENSE.

The excitation output (VEXC) and the two measured voltages (VRS, VDUT) are implemented through channels on the NI-USB-6009 DAQ. Analog Output channel # 0 (AO-0) is used to create the excitation output voltage, using terminals AO-0 (#14) and GND (#16) on the DAQ analog connector block. The diode voltage VDUT is measured by Analog Input channel # 1 (AI-1), which is set up as a differential input using terminals AI-1 (#5) and AI-5 (#6) on the connector block. Similarly, the voltage across the current sensing resistor (VRS) is measured by Analog Input channel # 0 (AI-0), which is also set up as a differential input using terminals AI-0 (#2) and AI-4 (#3) on the connector block.

The device under test (DUT) and current sensing resistor (RSENSE) are inserted into a superstrip solderless breadboard, and connections from these tie points to the DAQ analog screw terminal connector block are achieved with lengths of solid insulated hookup wire, as shown in Fig. E1.5b below.

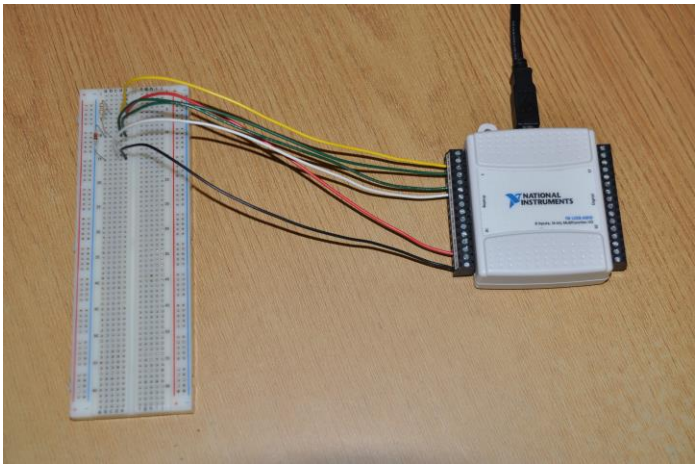

Figure E1.5b

Details of the connections to the DAQ and to the superstrip are shown below in Figs. E1.5c and E1.5d:

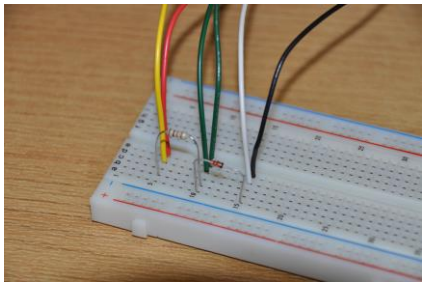

Figures E1.5c,d

For this procedure, use a current sensing resistor of RSENSE = 1.0 kΩ and a type 1N4148 test diode, as shown in Fig. E1.5b.

Measurement-5 From the front panel window, click on the run button to start the diode curve tracer VI. Use the following settings for the forward and reverse bias scan ranges: forward bias: 21 points from 0.0 Volts to +2.0 Volts, and reverse bias: 0 points from 0.0 Volts to 0.0 Volts, since the NI-USB-6009 DAQ analog output cannot create negative output voltages. Enable forward out and forward back segments of the scan, and remove the duplicate points for a total of 41 points. Enter a delay of 100 ms and an RSENSE value of 1 kohms. After rechecking all of the connections, click on the START SCAN button, which should start the measurement sequence and then display the resulting diode I-V characteristics on the x-y chart, similar to those shown in Fig. E1.5.

Once you are happy with the measurement, click on the SAVE DATA button to save the measured diode I-V characteristic data in an Excel spreadsheet format. A Save As … dialog window will open, and you can type in the name of the file that you want the data written to, for example, "Experiment1Procedure5.xls." Click on OK to write the file. Once you have saved the data, click on the STOP button to halt the measurement VI.

You might open this newly created file with Excel to verify that the data was properly written to the file. If everything was working properly, the first column should show the sequence of excitation voltages (VEXC) in units of Volts, the second column should show the voltage across the current sensing resistor (VRS) in units of Volts, the third column should show the voltage across the diode (VDUT) in units of Volts, and the fourth column should show the current through the diode (IDUT) in units of milliamperes, computed as IDUT = VRS/RSENSE. If you were to create an x-y graph in Excel using the third and fourth columns, you should obtain the same graph as which is shown on the front panel of the VI.

Comment It is generally a good idea to halt any running VI when you are done with it. If you wish to use other Windows programs, such as Excel, or Internet Explorer,

or Windows Explorer, you will find that these programs will run rather slowly while any VIs are running at the same time.

Question-5 (a) If the diode were reversed in its polarity (connecting its anode to ground), what would be the expected I-V curve?
(b) If the diode were replaced by another 1.0 kΩ resistor, what would be the expected I-V curve? What would the slope of the resulting I-V curve correspond to?

Comment You might wish to view the internal structure of the diode curve tracer by opening the block diagram window for this VI. This is a fairly complicated VI that uses a number of control structures and employs two other sub-VIs: DiodeStepGenerator.vi and DiodeMeasurement.vi. The DiodeStepGenerator.vi calls yet another sub-VI, RemoveArrayDuplicates.vi. You should try to locate these in the block diagram. If you double click on either of these sub-VIs, they will open and you will be able to then view their internal structure from their block diagrams. Try this, and open the block diagram for DiodeMeasurement.vi. This sub-VI consists simply of a flat sequence control structure whose borders look like a piece of photographic film. This consists of 4 frames [0…3] which are executed in sequence. By clicking on the left and right arrows at the top of the film boundary, you can sequence through the 4 frames. In this case, the #0 frame sends the excitation voltage VEXC to the DAQ card which then outputs it as Analog Output channel # 0 (AO-0). In frame #1, the system waits for a specified delay (in ms) to allow the effects of this new excitation voltage to the diode and resistor to settle out. In frame #2, the DAQ card reads Analog Input channel # 0 (AI-0) and sends this measurement value out as VRS. In frame #3, the DAQ card reads Analog Input channel # 1 (AI-1) and sends this measurement value out as VDUT. This sequence of 4 frames is executed each time for each new value of the excitation voltage and is fairly typical of the core of an automated measurement procedure.

Procedure 6 Measurement of a zener diode

Set-Up

Replace the 1N4148 diode of Procedure 5 with a 1N4732 zener diode, keeping the banded end (the cathode) connected to ground. Change the scan settings for the excitation voltage to scan upwards from 0.0 V to +5.0 V in 21 points, and then downwards from 0.0 V to 0.0 V in 0 points. Just clicking on the up/down buttons is the easy way to accomplish this.

Measurement-6

Press the START SCAN button to begin the measurement, after which, the resulting I-V characteristics of the zener diode should appear in the displayed graph.

Once you are happy with the measurement, click on the SAVE DATA button to save the measured diode I-V characteristic data in an Excel spreadsheet format. A Save As … dialog window will open, and you can type in the name of the file that you want the data written to, for example, "Experiment1Procedure6_1N4732_forward.xls." Click on OK to write the file.

Reverse the polarity of the zener diode, connecting its non-banded end (its anode) to ground. Press the START SCAN button again, and you should see a slightly different set of characteristics than before. Click on the SAVE DATA button, and save the data to a file named Experiment1Procedure6_1N4732_reverse.xls. Click on OK to write the file.

Question-6

(a) Using the data that was collected in the spreadsheet file, compute a value for the zener resistance r_z of the diode in its breakdown region. Similarly, compute a value for the forward (on) resistance r_f of the diode in its forward region. The easiest way to do this for both regions is to identify two strategic (I,V) points which define the best fit lines in these regions and then compute the inverse slopes of these lines.
(b) The power rating of the 1N4732 zener diode is quoted at 1.0 Watt. Calculate the maximum current that the diode can handle in the forward (on) direction and then in the reverse (zener) direction and not exceed the 1.0 Watt limit.

Extra Fun

Insert the 1N4732 zener diode into the curve tracer made from the lab transformer and the oscilloscope. Compare the resulting I-V characteristics with those obtained from the LabVIEW curve tracer.

Procedure 7 Characterization of a light-emitting diode (LED)

Comment

Circular LED's, as well as other small panel lamps, come in several standard sizes. A T-1 size is 3 mm in diameter, and a T-1 3/4 size is 5 mm dia. There are several ways of identifying which terminal is which on an LED. If the leads have not been cut, the anode or (+) lead will be the longer of the two. (This also holds true for parallel lead electrolytic capacitors.) If the leads have been cut, you will have to use the next method. Look straight down on the hemispherical dome of the LED (so that the LED would be shining toward you) and you should notice that the small lip at the bottom of the plastic has a flat side on it. The lead that is closest to this flat side is the cathode or (–) lead.

Set-Up

Locate a T-1 3/4 red LED and replace it for the diode in the LabVIEW curve tracer of Procedure 5 or 6 with its anode connected to ground. Start the DiodeCurveTracer.vi by pressing the Run button on the toolbar, and set the excitation voltage parameters to scan upward from 0.0 V to +5.0 V in 21 points (+0.25 V/step), and then downward from 0.0 V to 0.0 V in 0 points (0.0 V/step), for 41 total points when duplicates are removed. Use a 1.0 kΩ sensing resistor and set the delay to 100 ms. The current through the LED should be limited to no more than 20 mA to avoid burning it out during the measurement. However, the DAQ itself can only output up to 10 mA, so the DAQ inherently provides this safety margin.

Measurement-7

Press the START SCAN button to initiate the measurement process. You may notice that the LED will briefly glow as the curve tracer increases the sweep voltage. The resulting I-V characteristics for the LED should then appear on the displayed graph.

Once you are content with the measurement, click on the SAVE DATA button to save the measured diode I-V characteristic data in an Excel spreadsheet format. A Save As … dialog window will open, and you can type in the name of the file that you want the data written to, for example, "Experiment1Procedure7.xls." Click on OK to write the file. Once you have saved the data, click on the STOP button to halt the measurement VI.

Question-7

Discuss in your notebook why the turn-on voltage of the LED is significantly higher than that of a typical silicon switching or rectifier diode. Hint: LEDs are not made of silicon!

Procedure 8 Characterization of a photoconductive cell

Comment

Photoconductive cells are two terminal devices whose resistance is lowered by illumination. They are commonly used to sense light levels and as light sensors in various industrial control systems. One of the most common applications is to turn on yard lights at sunset, or to adjust the intensity of the dashboard lights in an automobile as the passenger compartment conditions grow darker. Photoconductive cells are quite robust, and they are electrically linear which makes them useful in certain applications where a nonlinear photodiode would not perform as well.

Set-Up

Locate a VacTec VT-301 photoconductive cell and replace it for the diode in the LabVIEW curve tracer of Procedure 5 or 6. Start the DiodeCurveTracer.vi by pressing the Run button on the toolbar, and set the excitation voltage parameters to scan upward from 0.0 V to +5.0 V in 21 points (+0.25 V/step), and then downward from 0.0 V to 0.0 V in 0 points (0.0 V/step), for 41 total points once duplicates are removed. Use a 1.0 kΩ sense resistor and set the delay to 100 ms.

Measurement-8

For each of the following four conditions, adjust the illumination on the photoconductive cell, press the START SCAN button to initiate the measurement process, wait for the measurement results to appear on the graph, and if you are satisfied with them, press the SAVE DATA button to record the data into a spreadsheet file with a unique name.
(a) First cover the photoconductive cell with a completely opaque object, like a small piece of metal or some thick cardboard. This will give the reference level of dark conditions and the highest value of resistance. Run the scan and record the data.
(b) Cover the photoconductive cell with just your fingertip and record a new set of I-V characteristics.
(c) Cover the photoconductive cell with a single sheet of notebook paper and record a new set of I-V characteristics.
(d) Uncover the photoconductive cell completely to the room light and record a new set of I-V characteristics.

Question-8

(a) Describe qualitatively the I-V curves for each of the four conditions recorded above. Explain how the photoconductive cell is or is not linear.
(b) For each of the four conditions, compute an average resistance of the photoconductive cell from the recorded data.
(c) Design a simple voltage divider circuit using one resistor and the photoconductive cell whose output will rise as the light level falls, and for which the voltage division ratio is 2:1 when the light level falls to about dusk levels (about the same as when the photoconductive cell is covered by just your finger).

Procedure 9 Diode switching transients

Set-Up

Configure a pulse generator or a function generator to produce a square wave with a frequency of 200 kHz and a 2.0 Volt peak amplitude, centered on a zero DC offset. That is, the output square wave should switch between levels of +2.0 V and -2.0 V. Connect the output of the pulse generator to an oscilloscope and verify the output signal parameters.

Using the solderless breadboard, construct the circuit of Fig. E1.8 using the following components:

R1 = 1.0 kΩ 5% 1/4W
D1 = 1N4007, 1N914, or 1N5819***

***Leave space for the diodes, but initially install a 220 pF ceramic disk capacitor where the diode would be placed.

Connect the Ch-1 and Ch-2 inputs of an oscilloscope to the circuit as shown in Fig. E1.9 using two 10× probes.

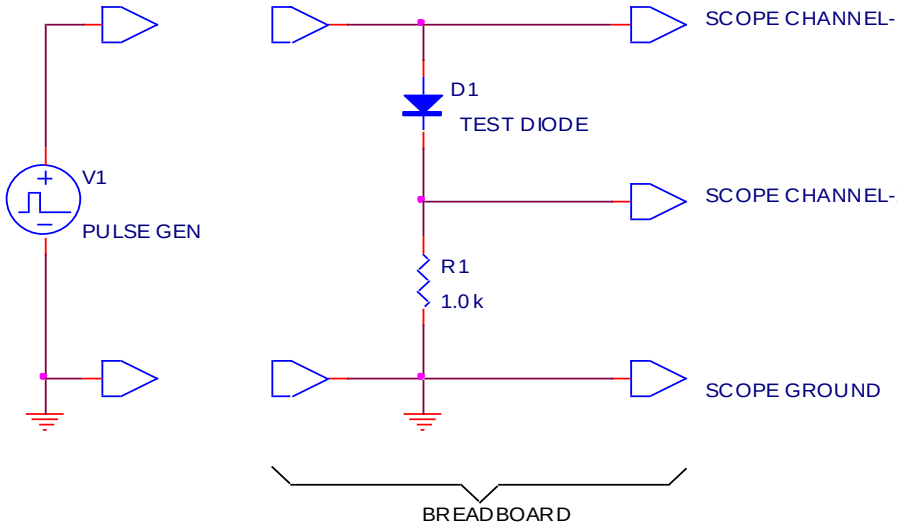

Figure E1.9

Adjust the oscilloscope and pulse generator until the traces of both channels are clear and several cycles of the waveforms fit nicely into the screen area.

Comment

Channel-1 of the oscilloscope monitors the voltage signal applied to the circuit, while channel-2 monitors the voltage across the resistor R1, and thus the current through the diode and resistor combination. Observe the current waveform associated with the 220 pF capacitor in place of the test diodes. This waveform represents the transient charging and discharging of the capacitor with a time constant of R1*C1 = 220 ns. The current waveform of a diode is more complicated than this, but it also includes a capacitive transient

which should resemble this waveform. In the diode waveforms that follow, try to recognize this characteristic capacitive waveshape in your analysis.

If your oscilloscope has the ability to subtract one channel from another, you may also find it useful to subtract Ch-2 from Ch-1 to yield the voltage across the test diode. You may find it helpful to display both the diode current and voltage waveforms on the oscilloscope at the same time to better appreciate what is occuring during a rapid switching of the input voltage pulse.

Measurement-9 Replace the 220 pF ceramic disk capacitor with a 1N4007 diode, using the polarity shown in Fig. E1.8. Reduce the frequency of the pulse generator to 2.0 kHz, and readjust the oscilloscope settings to produce a few complete cycles of each waveform.

Notice carefully that the Ch-2 waveform exhibits a large reverse current pulse that flows through the diode after each instance where the input voltage goes from positive to negative. When the input voltage goes from negative to positive, no such artifact occurs in the waveform. Sketch the waveforms in your laboratory notebook, scaling off both the voltage and time axes.

The reverse current pulse through the diode is composed of two phases: a short duration over which the reverse current is approximately constant, and a following phase over which the current decays toward zero. The length of the first phase, over which the diode reverse current is nearly constant, is called the storage time, t_S. Using the horizontal (time) controls on the oscilloscope, measure the storage time for the 1N4007 diode. (This should usually be in the range of 1 to 5 μs.)

Replace the 1N4007 diode with a 1N914 diode, keeping the same polarity. Notice that the reverse current pulse is absent with this type of diode. To "zoom-in" on the pulse edges, increase the frequency of the pulse generator to 200 kHz, and adjust the oscilloscope to display two complete cycles of the waveforms. Sketch the voltage and current waveforms in your laboratory notebook, scaling off both the voltage and time axes.

Now connect first a 33 pF ceramic capacitor in parallel with the diode and observe the effect on the oscilloscope. Increase the capacitance by substituting a 220 pF ceramic capacitor for the 33 pF one. Observe the effect on the oscilloscope. Increase the capacitance still further by substituting a 1000 pF ceramic capacitor for the 220 pF one, and observe the effect on the oscilloscope. From your observations, try to deduce from the waveform of the 1N914 diode by itself (no capacitors) the equivalent capacitance that the 1N914 diode introduces into the circuit.

Replace with 1N914 diode with a 1N5819 Schottky barrier diode. Sketch the voltage and current waveforms in your laboratory notebook, scaling off the voltage and time axes.

Question-9 (a) Both the 1N4007 and the 1N914 are silicon pn-junction diodes. Provide an explanation why the 1N4007 exhibits a strong reverse current transient while the 1N914 does not.

(b) The storage time t_S can be used to find the minority carrier lifetime τ of a diode. The two appropriate parameters are the forward current just prior to the reverse switching I_F, and the reverse current just after the reverse switching, I_R. Determine I_F and I_R for the 1N4007 diode from your waveform sketches. Then determine the minority carrier lifetime τ using the approximate formula

$$\frac{t_s}{\tau} = \ln\left(1 + \frac{I_F}{I_R}\right).$$

A more exact theory gives the relationship as

$$erf\left(\sqrt{\frac{t_s}{\tau}}\right) = \frac{I_F}{I_F + I_R},$$

where the error function is defined as

$$erf(x) = \frac{2}{\sqrt{\pi}} \int_0^x e^{-z^2} dz .$$

Use any mathematical software, such as MathCad, MatLab, or Mathematica to find the minority carrier lifetime τ using the above exact relationship.

(c) Diode characteristics are normally expected to lie in only quadrants 1 and 3 of the current-voltage axes, as the Shockley diode equation predicts. From the waveforms recorded for the 1N4007 diode, show conclusively that the diode characteristics also enter quadrant 4, where the current is negative and the voltage is positive.